A-BOLT 22

A-BOLT 22

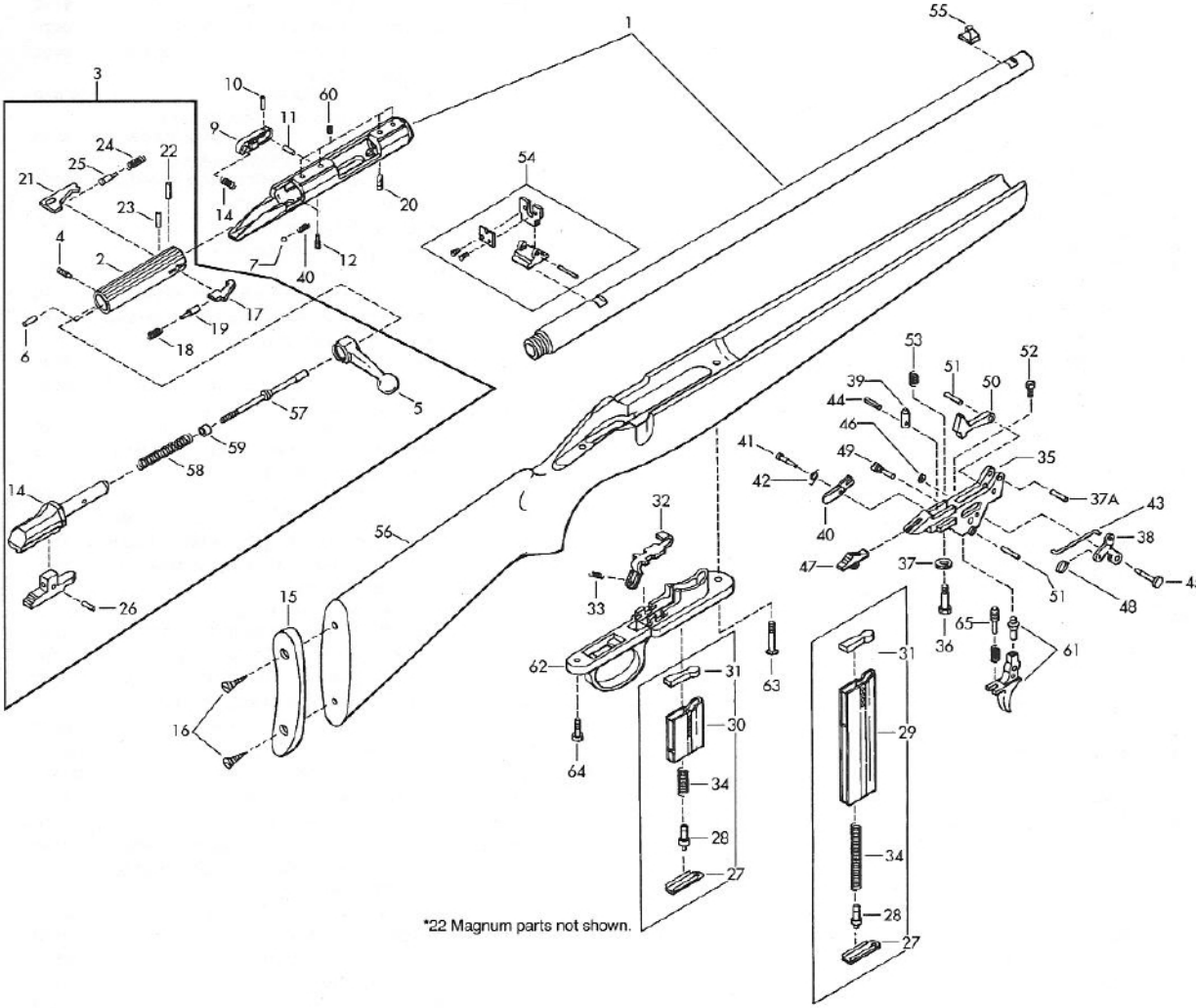

NOTE: WHEN ORDERING PARTS YOU MUST USE THE PART NUMBER AND NOT THE REFERENCE NUMBER.